HRM Baseline Nov 2013_OV-6c Context Establish QoL Program (Business Process)
System Architect
Monday, October 28, 2013 2:18 PM

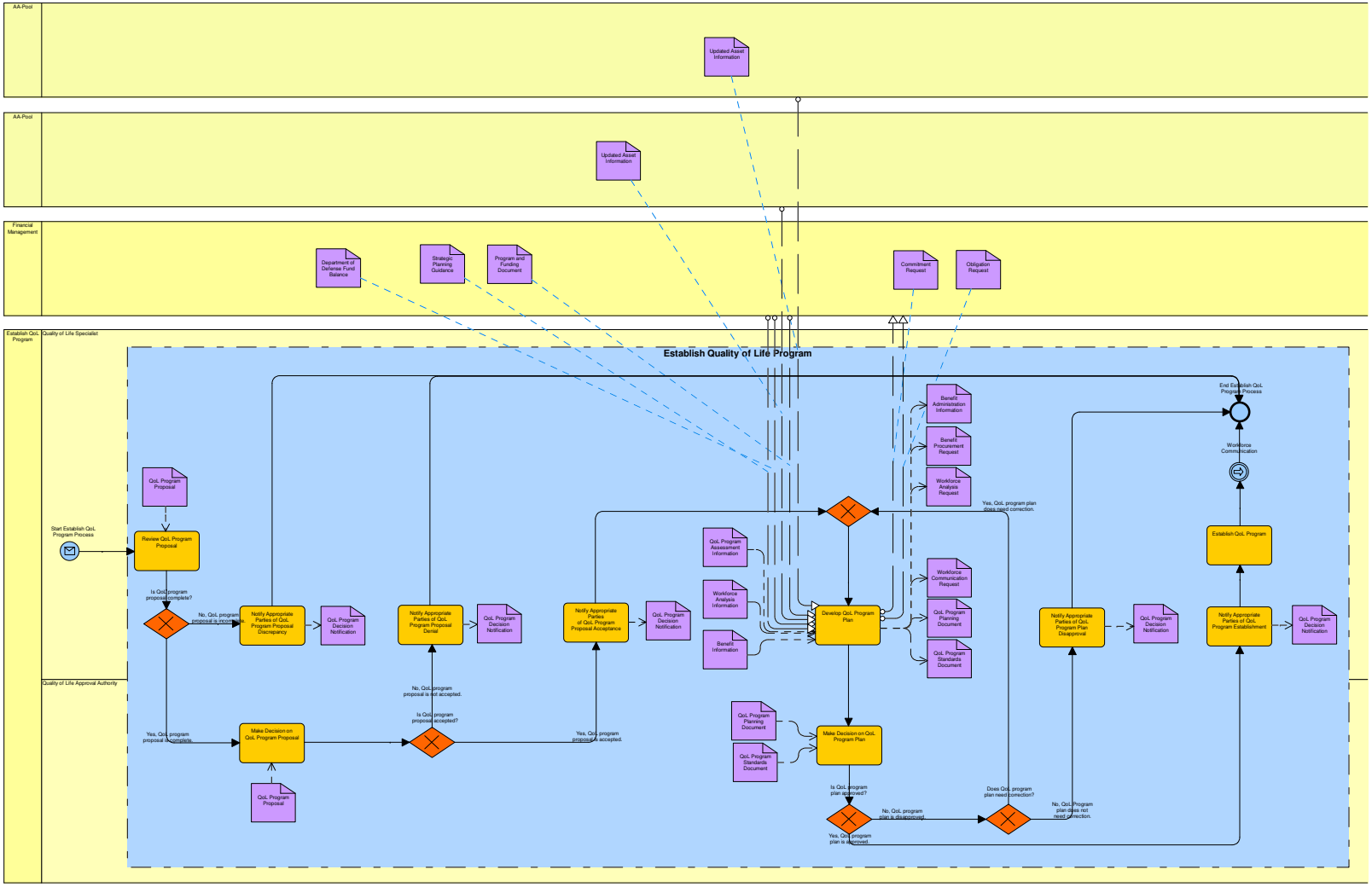
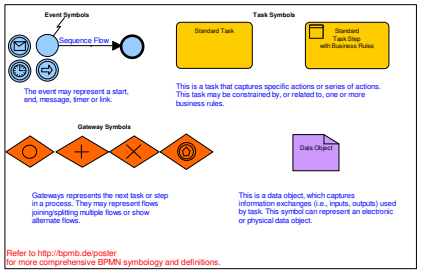
Business Process Model Legend