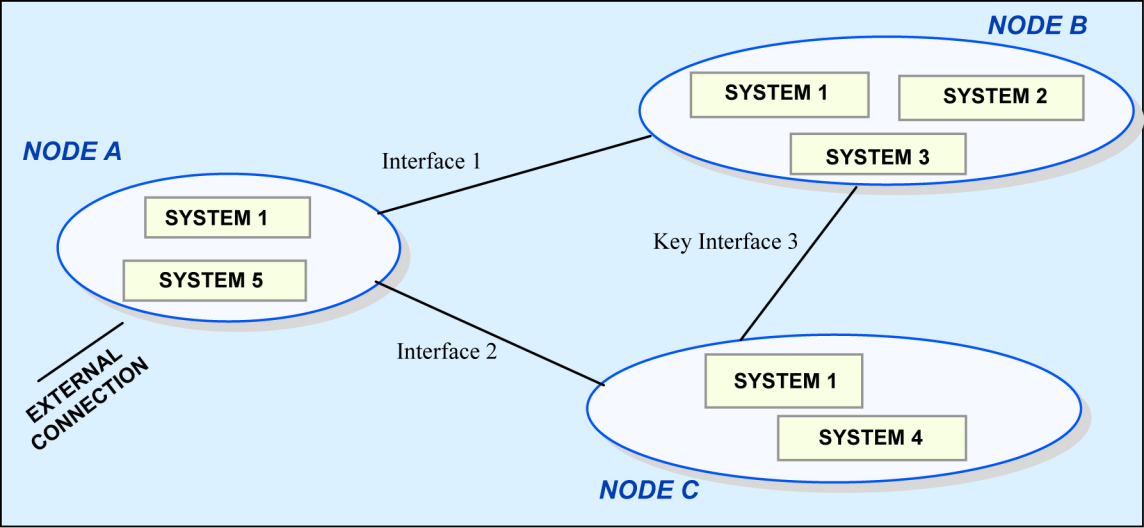
NODE B
SYSTEM 1
SYSTEM 2
SYSTEM 3
NODE A
SYSTEM 1
SYSTEM 5
Interface 1
Key Interface 3
Interface 2
EXTERNAL CONNECTION
SYSTEM 1
SYSTEM 4
NODE C